FLC230-TW LED [FP]

Projectors

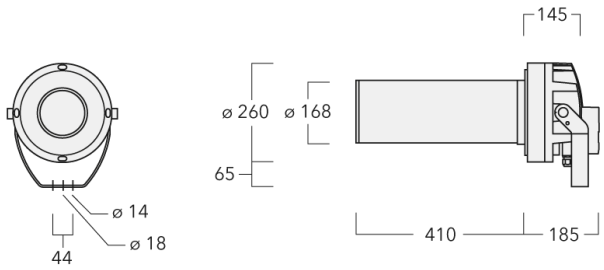

Description

Profile Projector [FP] for framing applications, polygon shape. Spherical/triple flat convex lens system. Tunable White Technology.

IP66, Class I. Class II on request. IK07. Marine-grade, die-cast aluminium alloy. 5CE superior corrosion protection including PCS hardware. Silicone CCG® Controlled Compression Gasket. Safety glass lens. One cable gland. Second gland for through wiring on request. PMMA LED lens array. Factory installed LED circuit board. LED board can be removed for upgrading. Integral EC electronic converter, thermally separated. DALI interface.

Configuration with 3 lenses 20°-38°. Extension of the beam angle to 4 lenses 39°-47° on request, to be specified at time of ordering.

Specifications

Material description

Body	Marine-grade, die-cast aluminium alloy
Lens	Safety glass lens
Colours	RAL9004 Signal black RAL9006 White aluminium RAL9007 Grey aluminium RAL7016 Anthracite grey RAL9016 Traffic white
Gasket	Silicone CCG® Controlled Compression Gasket
Fasteners	PCS Polymer Coated Stainless Steel Hardware
Ingress protection	IP66
Impact resistance	IK07
Corrosion resistance	5CE

Electrical description

Power supply	220-240V / 50-60 Hz
Driver / Ballast	Integral EC electronic converter, thermally separated
Power factor	> 0.9
Surge protection	1/2 kV (optional SP10)

Additional information

Lifetime	Ta=25° L70B50 > 50000h
Energy efficiency class	E (Light source)

Options

Light distribution	Colour temperature	Nominal Watt
symmetric Framing-Projector [FP] - min aperture angle	2200-6000K	32 W
symmetric Framing-Projector [FP] - max aperture angle		

Configurations

Light distribution	Part ID	Light source	Rated lumens	Rated input power	CRI	Weight (kg)
symmetric Framing-Projector [FP] - max aperture angle	139-3010_max	LED-FT-32W / 450 mA - 2200-6000 K	1349.6	35 W	80	11.10
symmetric Framing-Projector [FP] - min aperture angle	139-3010_min	LED-FT-32W / 450 mA - 2200-6000 K	1516.9	35 W	80	11.10

Mounting Accessories

Pole clamp PC

Description	Part ID	D1	Weight (kg)
PC1 76-89/60 Pole clamp, single (Ø 76-89)	139-2702	76-89	1.00

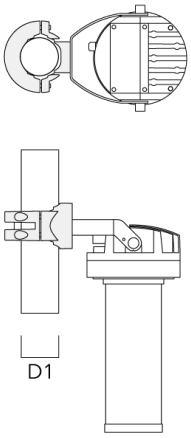

PC2 76-89/60 Pole clamp, double (Ø 76-89)	139-2703	76-89	1.00

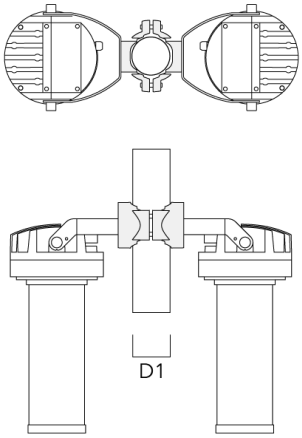

Description	Part ID	D1	Weight (kg)
PC1 82-109/60 Pole clamp, single (Ø 82-109)	139-2704	82-109	1.10

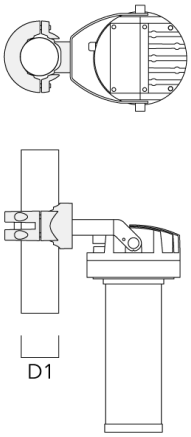

PC2 82-109/60 Pole clamp, double (Ø 82-109)	139-2705	82-109	1.10

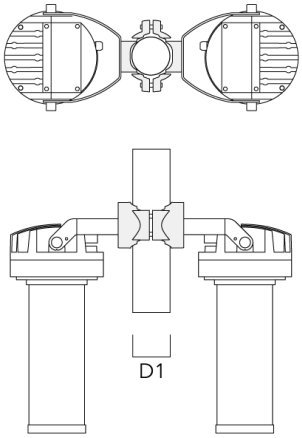

Description	Part ID	D1	Weight (kg)
PC1 102-114/60 Pole clamp, single (Ø 102-114)	139-2706	102-114	1.20

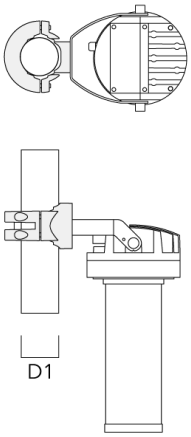

PC2 102-114/60 Pole clamp, double (Ø 102-114)	139-2707	102-114	1.20

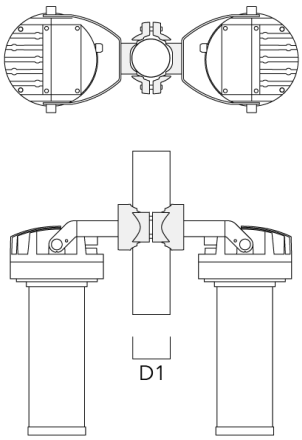

Description	Part ID	D1	Weight (kg)
PC1 114-133/60 Pole clamp, single (Ø 114-133)	139-2708	114-133	1.40

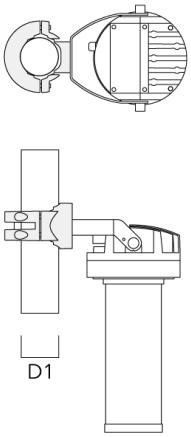
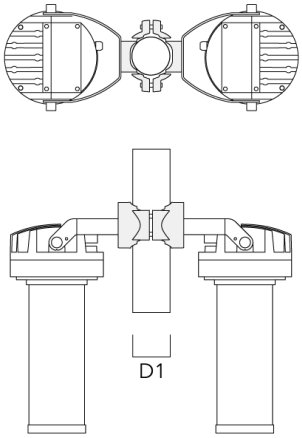
PC2 114-133/60 Pole clamp, double (Ø 114-133)	139-2709	114-133	1.40