139-2385

FLC210 LED

Description

IP66, Class I. Class II on request. IK07. Marine-grade, die-cast aluminium alloy. 5CE superior corrosion protection including PCS hardware. Silicone CCG® Controlled Compression Gasket. Safety glass lens. One cable gland. Second gland for through wiring on request. Integral EC electronic converter, thermally separated. CAD-optimised optics for superior illumination and glare control. OLC® One LED Concept. Factory installed LED circuit board. DALI Interface and Eco Step Dim® on request. Maximum one internal optical accessory possible.

Weight	2.00 kg
Light distribution	symmetric, very narrow beam [EE]
Light source	LED-3/9W / 250 mA - 2700 K
CRI	80
Power supply	EC
LEDs	3
Rated input power	11 W
Nominal Lumen (lm)	
LED Lumen	365
Total Lumen	1095
Tj	85
Rated lumens (lm)	
LED Lumen	324.4
Total Lumen	973.1
Ta	25

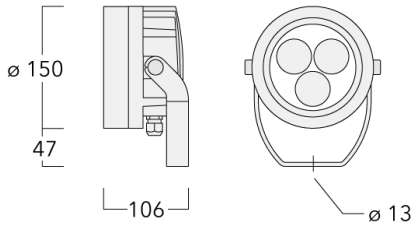

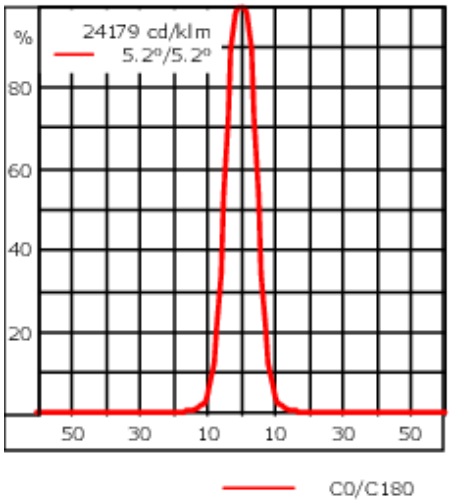

Specifications

Material description

Body	Marine-grade, die-cast aluminium alloy
Lens	Safety glass lens
Colours	RAL9004 Signal black RAL9006 White aluminium RAL9007 Grey aluminium RAL7016 Anthracite grey RAL9016 Traffic white
Gasket	Silicone CCG® Controlled Compression Gasket
Fasteners	PCS Polymer Coated Stainless Steel Hardware
Ingress protection	IP66
Impact resistance	IK07
Corrosion resistance	5CE
Windage	0.018 m^2

Electrical description

Power supply	220-240V / 50-60 Hz
Driver / Ballast	Standard. Optional DALI version available. To be specified at time of ordering.
Power factor	> 0.9
Surge protection	SP10

Additional information

Lifetime	Ta=25° L90B10 > 90000h
Energy efficiency class	D-E (Light source)

Mounting Accessories

Pole clamp TS

Description	Part ID	D1	Weight (kg)	D
TS1-2/M12 Pole clamp, single (Ø 76-89)	147-0543	76-89	1.40	76-89

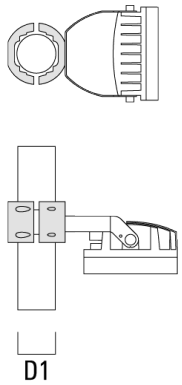

Pole clamp PC

Description	Part ID	D1	Weight (kg)
PC2 76-89/60 Pole clamp, double (Ø 76-89)	139-2703	76-89	1.00

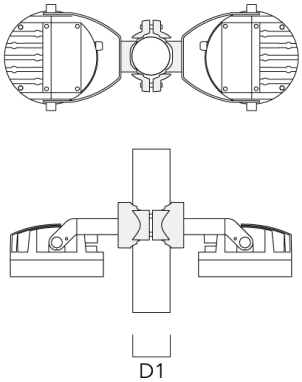

Description	Part ID	D1	Weight (kg)
PC1 76-89/60 Pole clamp, single (Ø 76-89)	139-2702	76-89	1.00

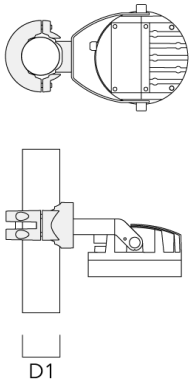

PC2 102-114/60 Pole clamp, double (Ø 102-114)	139-2707	102-114	1.20

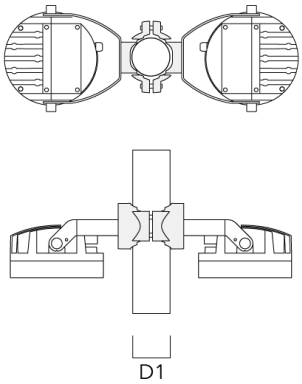

Description	Part ID	D1	Weight (kg)
PC1 102-114/60 Pole clamp, single (Ø 102-114)	139-2706	102-114	1.20

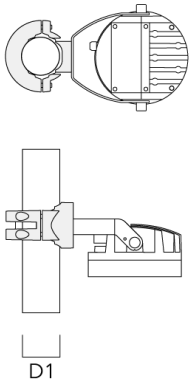

PC2 114-133/60 Pole clamp, double (Ø 114-133)	139-2709	114-133	1.40

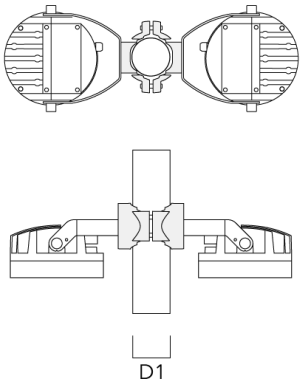

Description	Part ID	D1	Weight (kg)
PC1 114-133/60 Pole clamp, single (Ø 114-133)	139-2708	114-133	1.40

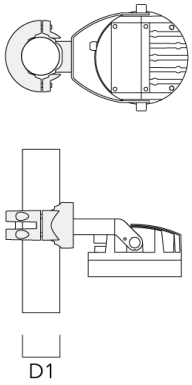

PC2 82-109/60 Pole camp, double (Ø 82-109)	139-2705	82-109	1.10

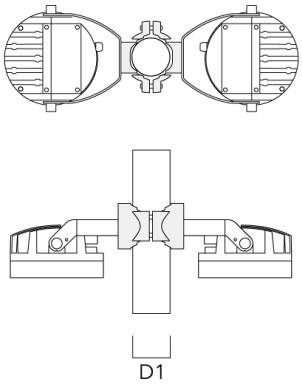

Description	Part ID	D1	Weight (kg)
PC1 82-109/60 Pole camp, single (Ø 82-109)	139-2704	82-109	1.10

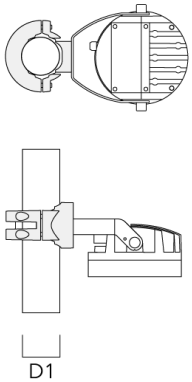

Optical Accessories

Linear spread lens

Description	Part ID	C1
IO-180-FLC210-LED	139-2404	100

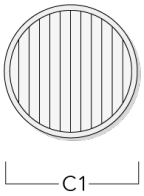

Honeycomb louvre

Description	Part ID	C1
IW-FLC210-LED - [EE] [EES]	139-2405	100

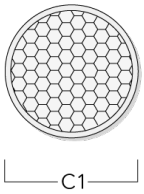

Glare shield

Description	Part ID	A	C1
ES-FLC210-LED	139-2406	86	149

Snoot
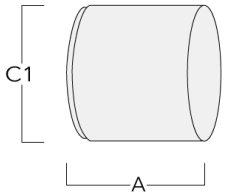
Description	Part ID	A	C1
ET-FLC210-LED	139-2407	86	149