139-2491_min

FLC210-CC LED [FP]

Description

RGBW/RGBA Colour Changer Profile Projector [FP] for framing applications, polygon shape. Spherical and aspherical, double flat convex lens system.

IP66, Class III. IK05. Marine-grade, die-cast aluminium alloy. 5CE superior corrosion protection including PCS hardware. Silicone CCG® Controlled Compression Gasket. Safety glass lens. One cable gland. Second gland for through wiring on request. Electronic control gear in separate gearbox (medium), prewired. Glass LED lens array. Factory installed LED circuit board. DMX interface.

Weight	4.00 kg
Light distribution	symmetric Framing-Projector [FP] - min aperture angle
Light source	LED-FT-15W - RGBA
CRI	20
Power supply	EC
LEDs	1
Rated input power	17 W
Rated lumens (lm)	
LED Lumen	352.6
Total Lumen	352.6
Ta	25
Nominal Lumen (lm)	
LED Lumen	1480
Total Lumen	1480
Tc	25

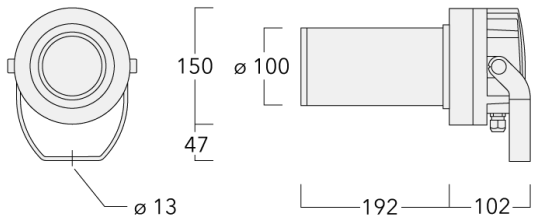

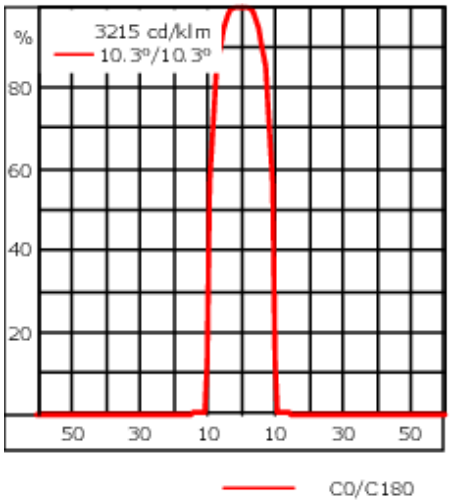

Specifications

Material description

Body	Marine-grade, die-cast aluminium alloy
Lens	Safety glass lens
Colours	RAL9004 Signal black RAL9006 White aluminium RAL9007 Grey aluminium
Gasket	Silicone CCG® Controlled Compression Gasket
Fasteners	PCS Polymer Coated Stainless Steel Hardware
Ingress protection	IP66
Impact resistance	IK05
Corrosion resistance	5CE

Electrical description

Driver / Ballast	DMX (separate gearbox)
Power factor	> 0.9

Additional information

Lifetime	Ta=40° L70B50 > 50000h

Electrical Accessories

Gear box

Description	Part ID	A	B	C1	C2	Weight (kg)
GB200 R200x120 gear box (medium)	139-2526	75	120	229	200	1.05

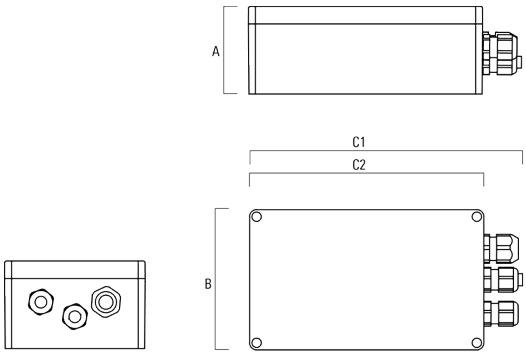

GB200 R230x140 gear box (large)	139-2527	95	140	259	230	1.20

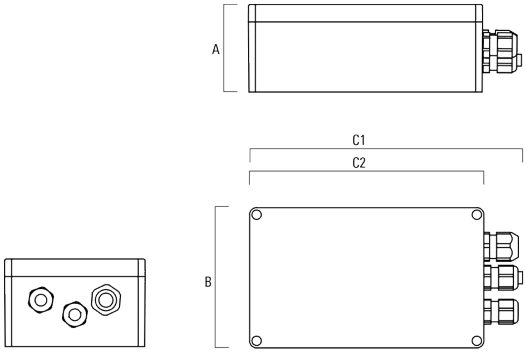

Mounting Accessories

Pole clamp PC - Rotatable

Description	Part ID	D1	Weight (kg)
PC1 76-89/60 Pole clamp, single (Ø 76-89)	139-2702	76-89	1.00

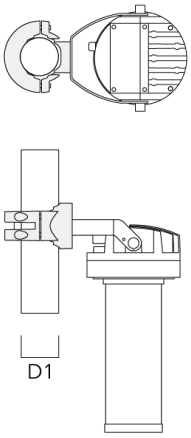

PC2 76-89/60 Pole clamp, double (Ø 76-89)	139-2703	76-89	1.00

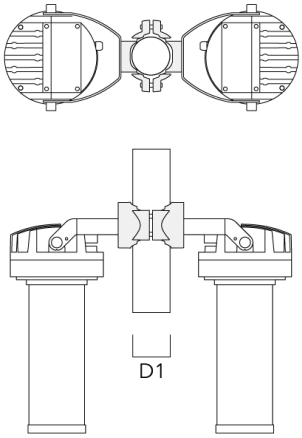

Description	Part ID	D1	Weight (kg)
PC1 82-109/60 Pole clamp, single (Ø 82-109)	139-2704	82-109	1.10

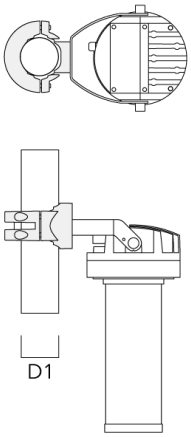

PC2 82-109/60 Pole clamp, double (Ø 82-109)	139-2705	82-109	1.10

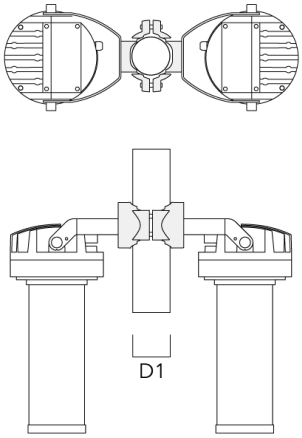

Description	Part ID	D1	Weight (kg)
PC1 102-114/60 Pole clamp, single (Ø 102-114)	139-2706	102-114	1.20

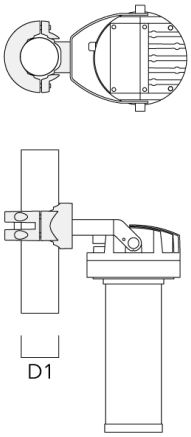

PC2 102-114/60 Pole clamp, double (Ø 102-114)	139-2707	102-114	1.20

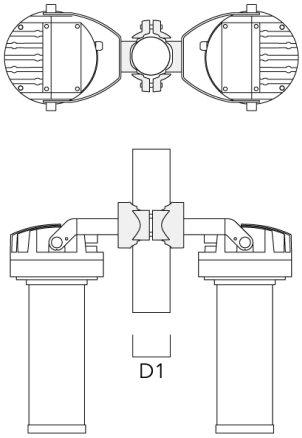

Description	Part ID	D1	Weight (kg)
PC1 114-133/60 Pole clamp, single (Ø 114-133)	139-2708	114-133	1.40

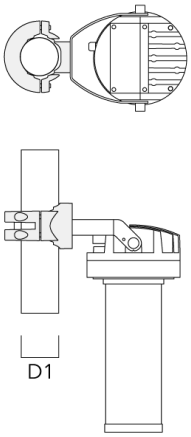
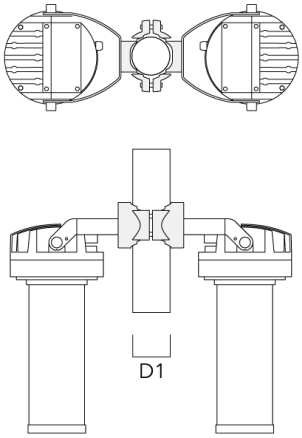
PC2 114-133/60 Pole clamp, double (Ø 114-133)	139-2709	114-133	1.40