139-2481_min

FLC210 LED [FP]

Description

Profile Projector [FP] for framing applications, polygon shape. Spherical and aspherical, double flat convex lens system.

IP66, Class I. Class II on request. IK05. Marine-grade, die-cast aluminium alloy. 5CE superior corrosion protection including PCS hardware. Silicone CCG® Controlled Compression Gasket. Safety glass lens. One cable gland. Second gland for through wiring on request. Glass LED lens array. Factory installed LED circuit board. Integral electronic control gear, thermally separated.

Weight	4.00 kg
Light distribution	symmetric Framing-Projector [FP] - min aperture angle
Light source	LED-FT-26W - 3000 K
CRI	80
Power supply	EC
LEDs	1
Rated input power	28 W
Rated lumens (lm)	
LED Lumen	1690.6
Total Lumen	1690.6
Ta	25
Nominal Lumen (lm)	
LED Lumen	3295
Total Lumen	3295
Tc	25

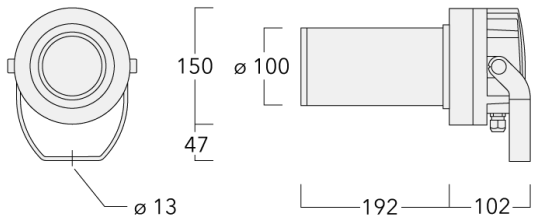

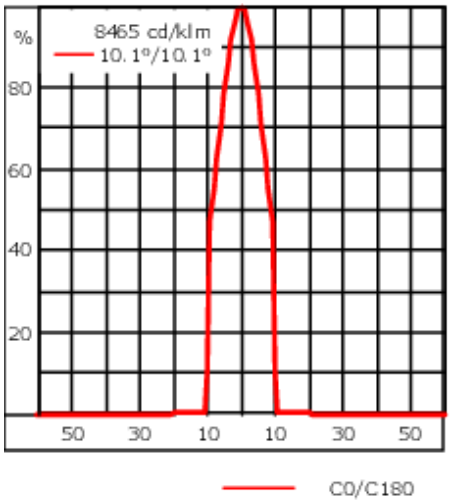

Specifications

Material description

Body	Marine-grade, die-cast aluminium alloy
Lens	Safety glass lens
Colours	RAL9004 Signal black RAL9006 White aluminium RAL9007 Grey aluminium RAL7016 Anthracite grey RAL9016 Traffic white
Gasket	Silicone CCG® Controlled Compression Gasket
Fasteners	PCS Polymer Coated Stainless Steel Hardware
Ingress protection	IP66
Impact resistance	IK05
Corrosion resistance	5CE

Electrical description

Power supply	220-240V / 50-60 Hz
Driver / Ballast	Standard. Optional DALI version available. To be specified at time of ordering.
Power factor	> 0.9
Surge protection	6/6 kV (optional SP10, only for ON/OFF)

Additional information

Lifetime	Ta=25° L70B50 > 50000h
Energy efficiency class	F (Light source)

Mounting Accessories

Pole clamp PC

Description	Part ID	D1	Weight (kg)
PC1 76-89/60 Pole clamp, single (Ø 76-89)	139-2702	76-89	1.00

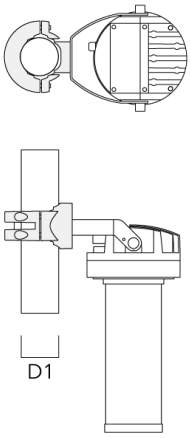

PC2 76-89/60 Pole clamp, double (Ø 76-89)	139-2703	76-89	1.00

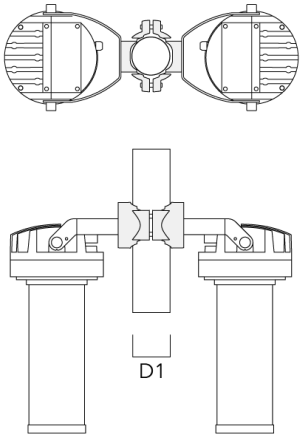

Description	Part ID	D1	Weight (kg)
PC1 82-109/60 Pole clamp, single (Ø 82-109)	139-2704	82-109	1.10

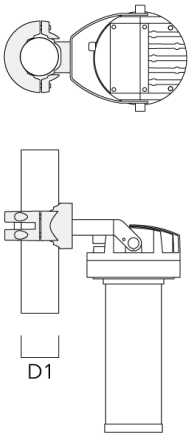

PC2 82-109/60 Pole clamp, double (Ø 82-109)	139-2705	82-109	1.10

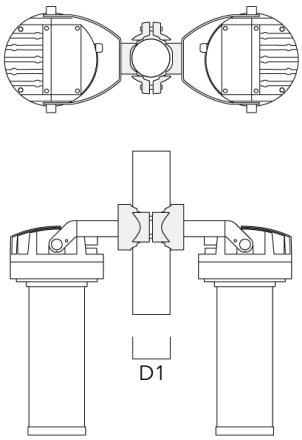

Description	Part ID	D1	Weight (kg)
PC1 102-114/60 Pole clamp, single (Ø 102-114)	139-2706	102-114	1.20

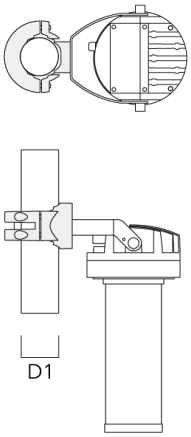

PC2 102-114/60 Pole clamp, double (Ø 102-114)	139-2707	102-114	1.20

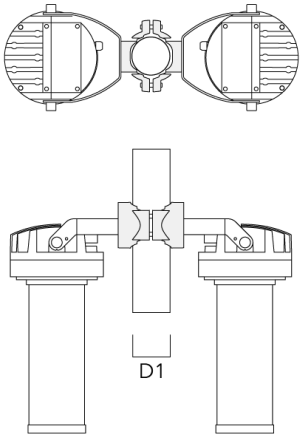

Description	Part ID	D1	Weight (kg)
PC1 114-133/60 Pole clamp, single (Ø 114-133)	139-2708	114-133	1.40

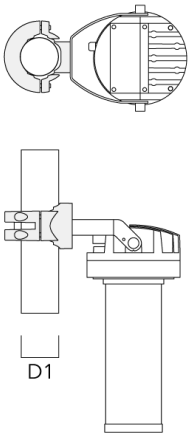
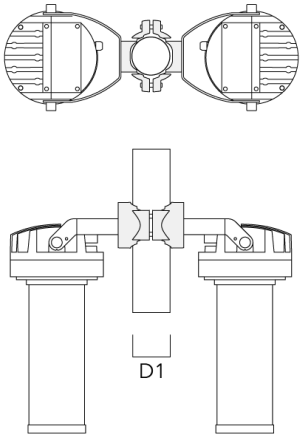
PC2 114-133/60 Pole clamp, double (Ø 114-133)	139-2709	114-133	1.40