115-1889

ZAT440-FT LED

Description

IP66, Class I. IK09. Marine-grade, die-cast aluminium alloy. 5CE superior corrosion protection + primer including PCS hardware. PMMA main lens. Silicone CCG® Controlled Compression Gasket. Luminaire is factory-sealed and does not need to be opened during installation.

Integral electronic converter with DALI interface in thermally separated compartment. CAD-optimised indirect optics for superior illumination and glare control. Factory installed LED circuit board.

Including 0.5 m cable with a cable connector.

Weight	7.80 kg
Light distribution	rectangular [R50]
Light source	LED-FT-24W / 700 mA - 4000 K
CRI	80
Power supply	EC
LEDs	1
Rated input power	27 W
Rated lumens (lm)	
LED Lumen	3418.8
Total Lumen	3418.8
Ta	25
Nominal Lumen (lm)	
LED Lumen	4400
Total Lumen	4400
Tc	25

WE-EF LIGHTING (Thailand) Co., Ltd.
57 Moo 5, Kingkaew Rd., Bangplee, 10540 Samutprakarn - Phone: +66 2 738 96 20 - Fax: +66 2 738 96 29
https://we-ef.com/asia

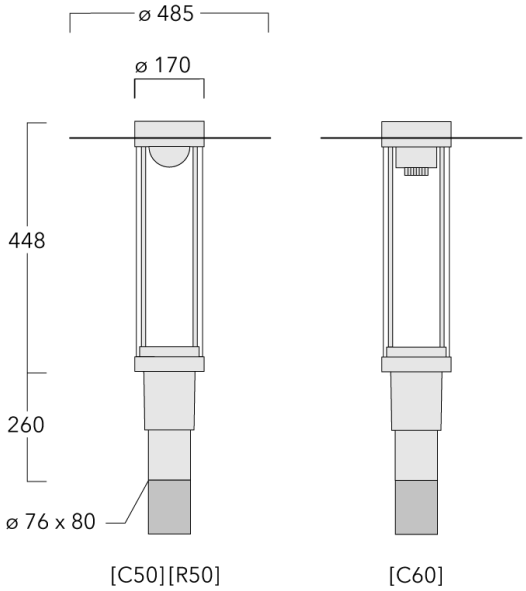

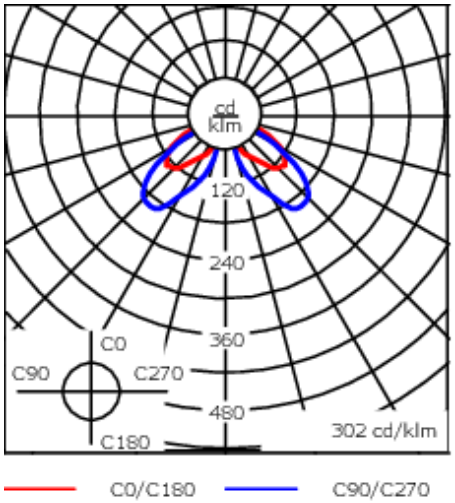

Specifications

Material description

Body	Marine-grade, die-cast aluminium alloy
Lens	PMMA
Colours	RAL9004 Signal black RAL9007 Grey aluminium RAL7016 Anthracite grey RAL9016 Traffic white
Gasket	Silicone CCG® Controlled Compression Gasket
Fasteners	PCS Polymer Coated Stainless Steel Hardware
Ingress protection	IP66
Impact resistance	IK09
Corrosion resistance	5CE
Windage	0.160 m^2

Electrical description

Driver / Ballast	Integral electronic converter with DALI interface in thermally separated compartment
Power factor	> 0.9

Additional information

Lifetime	Ta=25° L70B50 > 50000h
BUG Rating	Please see individual Spec Sheets for classification of Backlight, Uplight and Glare

Optical Accessories

Light shield

Description	Part ID	H1
Light shield LS180	159-0321	120

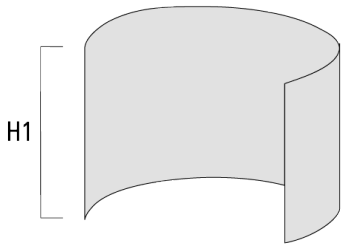

Mounting Accessories

Wall and pole brackets RZ

Description	Part ID	C1	D1	D2	D × L1	M1	Weight (kg)
Wall bracket RZ0-400, single	115-1324	277	231	195	76 x 80	12	3.50

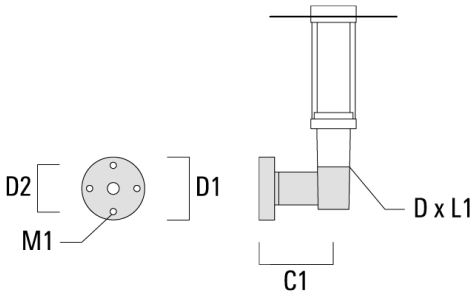
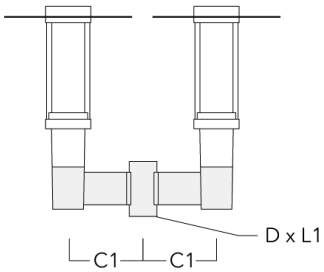
Pole bracket RZ2-400, double	115-1323	258			76 x 100		4.90