115-1245

ZFT440-FT LED

Description

IP66, Class I. Class II on request. IK09. Marine-grade, die-cast aluminium alloy. 5CE superior corrosion protection including PCS hardware. Silicone CCG® Controlled Compression Gasket. PMMA main lens. Integral EC electronic converter in thermally separated compartment. CAD-optimised indirect optics for superior illumination and glare control. Factory installed LED circuit board. The luminaire is factory-sealed and does not need to be opened during installation.

Weight	5.50 kg
Light distribution	symmetric distribution [C60]
Light source	LED-FT-37W / 700 mA - 3000 K
CRI	80
Power supply	EC
LEDs	1
Rated input power	42 W
Rated lumens (lm)	
LED Lumen	4021.8
Total Lumen	4021.8
Ta	25
Nominal Lumen (lm)	
LED Lumen	6330
Total Lumen	6330
Tc	25

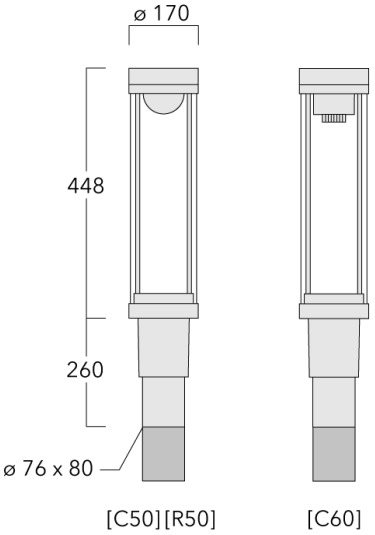

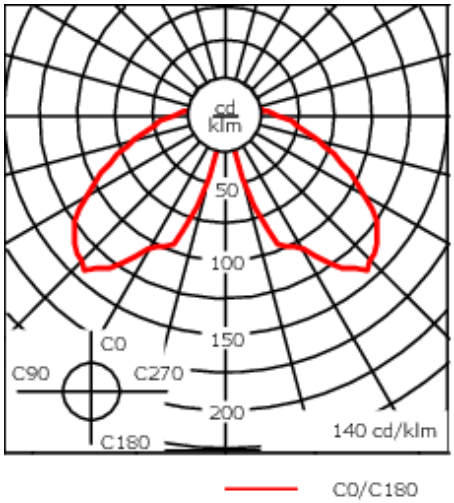

Specifications

Material description

Body	Marine-grade, die-cast aluminium alloy
Lens	PMMA
Colours	RAL9004 Signal black RAL9006 White aluminium RAL9007 Grey aluminium RAL7016 Anthracite grey RAL9016 Traffic white
Gasket	Silicone CCG® Controlled Compression Gasket
Fasteners	PCS Polymer Coated Stainless Steel Hardware
Ingress protection	IP66
Impact resistance	IK09
Corrosion resistance	5CE
Windage	0.133 m^2

Electrical description

Power supply	220-240V / 50-60 Hz
Driver / Ballast	Integral EC electronic converter in thermally-separated compartment
Power factor	> 0.9
Surge protection	6/6 kV (optional SP10)

Additional information

Lifetime	Ta=25° L70B50 > 50000h
Energy efficiency class	C-D (Light source)

Control

Eco Step Dim® Basic

Description	Part ID
Eco Step Dim® Basic LED	430-0001

Eco Step Dim® Advanced

Description	Part ID
Eco Step Dim® Advanced LED	430-0002

Mounting Accessories

Wall and pole brackets RZ

Description	Part ID	C1	D1	D2	D × L1	M1	Weight (kg)
RZ0-400 Wall bracket, single	115-1324	277	231	195	76 x 80	12	3.50

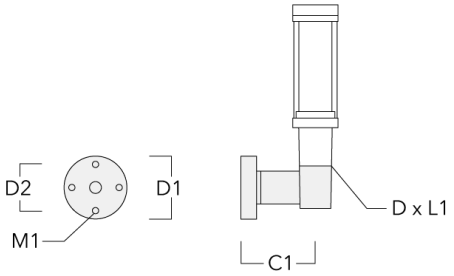

RZ2-400 Pole bracket, double	115-1323	258			76 x 100		4.90

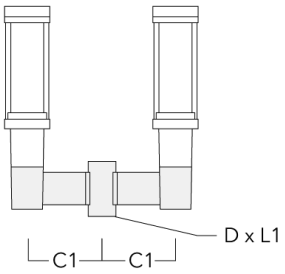

Optical Accessories

Light shield
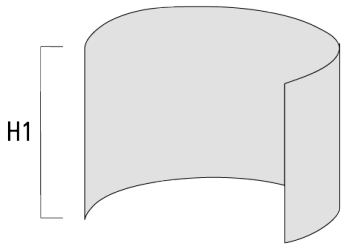
Description	Part ID	H1
LS180-[C60]	159-0321	120