FLC331 Surface mounted

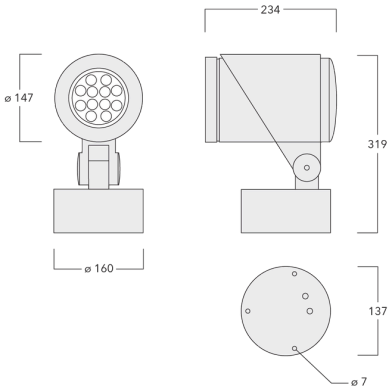

Description

IP66. IK08. Marine-grade, die-cast aluminium alloy. 5CE superior corrosion protection including PCS hardware. Safety glass lens. Silicone CCG® Controlled Compression Gasket. Luminaire is factory-sealed and does not need to be opened during installation. Knuckle permits 350° rotation, forward tilt 39° and backward tilt 93°.Integral EC electronic converter. Advanced thermal management protects LEDs while optimising lumens output. CAD-optimised optics for superior illumination and glare control. One cable entry.Optical accessories are factory-installed. To be specified at time of ordering.

Specifications

Material description

Body	Marine-grade, die-cast aluminium alloy
Lens	Safety glass lens
Colors	RAL8019 Grey brown; RAL9004 Signal black; RAL9007 Grey aluminium; RAL9016 Traffic white
Gasket	Silicone CCG® Controlled Compression Gasket
Fasteners	PCS Polymer Coated Stainless Steel Hardware
Ingress protection	IP66
Impact resistance	IK08
Corrosion resistance	5CE

Electrical description

Power supply	220-240V / 50-60 Hz
Driver / Ballast	DALI
Power factor	> 0.9
Surge protection	SP10 optional
Energy efficiency	C-D (Light source)

Additional information

Windage	0,01 m^2
Lifetime	Ta=25° L90B10 > 90000h

WE-EF LIGHTING USA, LLC
410-D Keystone Drive, 15086 Warrendale, PA 15086 - Phone: +1 724 742 0030
customersupport.usa@we-ef.com - https://we-ef.com/us

Options

Light distribution

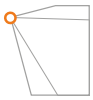
[W] bi-symmetric, wide beam

[M] symmetric, medium beam

[VN] symmetric, very narrow beam

[VNS] symmetric, very narrow beam, sharp cut-off

[EE] symmetric, very narrow beam

Color temperature

2700K

3000K

4000K

Nominal Watt

24 W

36 W

52 W

Configurations

Light distribution	Part ID	Light source	Delivered lumens	Rated input power	CRI
[EE] symmetric, very narrow beam	145-0401_us	LED-12/36W/2700K	3634.6 lm	36 W	80
[M] symmetric, medium beam	145-0396_us	LED-12/24W/2700K	2759.4 lm	24 W	80
	145-0408_us	LED-12/24W/3000K	2963.8 lm	24 W	80
	145-0420_us	LED-12/24W/4000K	3168.2 lm	24 W	80
	145-0400_us	LED-12/36W/2700K	3832.5 lm	36 W	80
	145-0412_us	LED-12/36W/3000K	4139.1 lm	36 W	80
	145-0404_us	LED-12/52W/2700K	5314.4 lm	52 W	80
	145-0416_us	LED-12/52W/3000K	5621 lm	52 W	80
	145-0428_us	LED-12/52W/4000K	5876.5 lm	52 W	80
[VN] symmetric, very narrow beam	145-0397_us	LED-12/24W/2700K	2616.9 lm	24 W	80
	145-0409_us	LED-12/24W/3000K	2810.7 lm	24 W	80
	145-0421_us	LED-12/24W/4000K	3004.6 lm	24 W	80
	145-0413_us	LED-12/36W/3000K	3925.3 lm	36 W	80
	145-0405_us	LED-12/52W/2700K	5039.9 lm	52 W	80
	145-0417_us	LED-12/52W/3000K	5330.7 lm	52 W	80
	145-0429_us	LED-12/52W/4000K	5573 lm	52 W	80
[VNS] symmetric, very narrow beam, sharp cut-off	145-0398_us	LED-12/24W/2700K	2245.1 lm	24 W	80
	145-0410_us	LED-12/24W/3000K	2245.1 lm	24 W	80
	145-0422_us	LED-12/24W/4000K	2540.5 lm	24 W	80
	145-0402_us	LED-12/36W/2700K	3072.2 lm	36 W	80
	145-0414_us	LED-12/36W/3000K	3072.2 lm	36 W	80
	145-0406_us	LED-12/52W/2700K	3781.2 lm	52 W	80
	145-0418_us	LED-12/52W/3000K	3781.2 lm	52 W	80
	145-0430_us	LED-12/52W/4000K	4312.9 lm	52 W	80
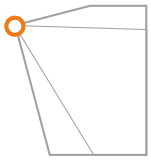	145-0395_us	LED-12/24W/2700K	2213.9 lm	24 W	80
	145-0407_us	LED-12/24W/3000K	2377.9 lm	24 W	80
	145-0419_us	LED-12/24W/4000K	2541.9 lm	24 W	80
	145-0399_us	LED-12/36W/2700K	3074.9 lm	36 W	80

WE-EF LIGHTING USA, LLC
410-D Keystone Drive, 15086 Warrendale, PA 15086 - Phone: +1 724 742 0030
customersupport.usa@we-ef.com - https://we-ef.com/us
Subject to technical changes and errors. - Generated on 05/01/2026

Light distribution	Part ID	Light source	Delivered lumens	Rated input power	CRI
[W] bi-symmetric, wide beam	145-0411_us	LED-12/36W/3000K	3320.9 lm	36 W	80
	145-0403_us	LED-12/52W/2700K	4263.9 lm	52 W	80
	145-0415_us	LED-12/52W/3000K	4509.9 lm	52 W	80
	145-0427_us	LED-12/52W/4000K	4714.9 lm	52 W	80
	145-0427_us	LED-12/52W/4000K	4714.9 lm	52 W	80

WE-EF LIGHTING USA, LLC
410-D Keystone Drive, 15086 Warrendale, PA 15086 - Phone: +1 724 742 0030
customersupport.usa@we-ef.com - https://we-ef.com/us
Subject to technical changes and errors. - Generated on 05/01/2026