FLC341 Surface mounted

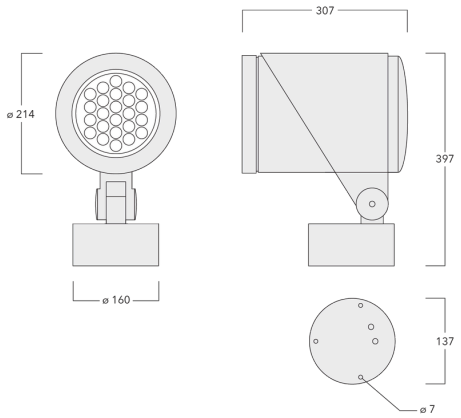

Description

IP66. IK08. Marine-grade, die-cast aluminium alloy. 5CE superior corrosion protection including PCS hardware. Safety glass lens. Silicone CCG® Controlled Compression Gasket. Luminaire is factory-sealed and does not need to be opened during installation. Knuckle permits 350° rotation, forward tilt 42° and backward tilt 99°.Integral EC electronic converter. Advanced thermal management protects LEDs while optimising lumens output. CAD-optimised optics for superior illumination and glare control.

One cable entry.Optical accessories are factory-installed. To be specified at time of ordering.

Specifications

Material description

Body	Marine-grade, die-cast aluminium alloy
Lens	Safety glass lens
Colours	RAL7016 Anthracite grey; RAL9004 Signal black; RAL9006 White aluminium; RAL9007 Grey aluminium; RAL9016 Traffic white
Gasket	Silicone CCG® Controlled Compression Gasket
Fasteners	PCS Polymer Coated Stainless Steel Hardware
Ingress protection	IP66
Impact resistance	IK08
Corrosion resistance	5CE

Electrical description

Power supply	220-240V / 50-60 Hz
Driver / Ballast	DALI
Power factor	> 0.9
Surge protection	
Energy efficiency	D-E (Light source)

Additional information

Windage	0,025 m^3
Lifetime	Ta=25° L90B10 > 90000h

Options

Light distribution

[B] symmetric, wide beam

[M] symmetric, medium beam

[EE] symmetric, very narrow beam

Colour temperature

2700K

3000K

4000K

Nominal Watt

48 W

72 W

Configurations

Light distribution	Part ID	Light source	Rated lumens	Rated input power	CRI
[B] symmetric, wide beam	145-0449	LED-24/48W/2700K	4358.6 lm	48 W	80
	145-0461	LED-24/48W/3000K	4681.5 lm	48 W	70
	145-0473	LED-24/48W/4000K	5004.3 lm	48 W	70
	145-0453	LED-24/72W/2700K	6053.6 lm	72 W	70
	145-0465	LED-24/72W/3000K	6537.9 lm	72 W	80
	145-0477	LED-24/72W/4000K	6941.5 lm	72 W	70
[EE] symmetric, very narrow beam	145-0451	LED-24/48W/2700K	5306.4 lm	48 W	80
	145-0463	LED-24/48W/3000K	5699.4 lm	48 W	70
	145-0475	LED-24/48W/4000K	6092.5 lm	48 W	70
	145-0455	LED-24/72W/2700K	7370 lm	72 W	70
	145-0467	LED-24/72W/3000K	7959.6 lm	72 W	80
	145-0479	LED-24/72W/4000K	8450.9 lm	72 W	70
[M] symmetric, medium beam	145-0450	LED-24/48W/2700K	5311.4 lm	48 W	80
	145-0462	LED-24/48W/3000K	5704.8 lm	48 W	70
	145-0474	LED-24/48W/4000K	6098.2 lm	48 W	70
	145-0454	LED-24/72W/2700K	7376.9 lm	72 W	70
	145-0466	LED-24/72W/3000K	7967.1 lm	72 W	80
	145-0478	LED-24/72W/4000K	8458.9 lm	72 W	70

WE-EF LEUCHTEN GmbH
Töpinger Straße 16, 29646 Bispingen, Germany - Phone: +49 5194 909-0
info@we-ef.com - https://we-ef.com