WE-EF LEUCHTEN GmbH
Töpinger Straße 16, 29646 Bispingen, Germany - Phone: +49 5194 909-0
info@we-ef.com - https://we-ef.com

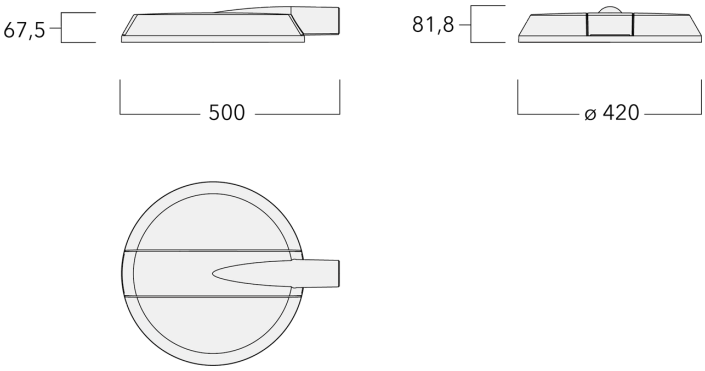

Description

The RFL110 features an elegant round shape, designed with the future in mind, offering a full suite of connectivity options. Post top installation on poles, seamlessly blending into urban landscapes by day and night. Constructed from marine-grade, die-cast aluminium alloy, with an IP66 rating, 5CE superior corrosion protection including PCS hardware and CCG® Controlled Compression Gasket. Non-reflective flat safety glass cover, hinged. Integral EC electronic converter, class I or class II. OLC® One LED Concept CAD-optimised optics and non-reflective flat safety glass cover, hinged, provide superior illumination and glare control. The luminaire is factory-sealed and does not need to be opened during installation. RFL110-SE with spigot size Ø 42 x 100 mm. Contact WE-EF direct or your local WE-EF sales representative for an individual solution designed to precisely meet your needs.

Photometric files (IES, LDT) for light distributions [S65] [S70] [P65] [R60] [A60] with Backlight Shield on request.

Specifications

Material description

Body	Marine-grade, die-cast aluminium alloy
Lens	Non-reflective safety glass lens
Colours	RAL9004 Signal black; RAL9006 White aluminium; RAL9007 Grey aluminium; RAL7016 Anthracite grey; RAL9016 Traffic white
Gasket	CCG® Controlled Compression Gasket
Fasteners	PCS Polymer Coated Stainless Steel Hardware
Ingress protection	IP66
Impact resistance	IK08
Corrosion resistance	5CE

Electrical description

Power supply	220-240V / 50-60 Hz
Driver / Ballast	Integral EC electronic converter. DALI
Power factor	> 0.9
Surge protection	6/6kV, optional 10kV
Energy efficiency	C-D (Light source)

Additional information

Windage	0,139 m^2
Lifetime	Ta=25° L90B10 > 100000h

Options

Light distribution

- [A60] asymmetric, forward throw
- [S65] asymmetric, side throw
- [S70] asymmetric, side throw
- [R60] rectangular, side throw
- [P65] pedestrian/bicycle lane

Colour temperature

- PCA
- 2200K
- 2700K
- 3000K
- 4000K

Nominal Watt

4 W
9 W
8 W
16 W
12 W
24 W
32 W
48 W

Configurations

Light distribution	Part ID	Light source	Rated lumens	Rated input power	CRI
[A60] asymmetric, forward throw	111-2021	LED-8/4W/PCA	503.3 lm	4 W	70
	111-1652	LED-8/8W/2200K	973.1 lm	8 W	70
	111-1653	LED-8/8W/2700K	973.1 lm	8 W	80
	111-1653-70	LED-8/8W/2700K	1040.3 lm	8 W	70
	111-1654	LED-8/8W/3000K	1040.3 lm	8 W	80
	111-1654-70	LED-8/8W/3000K	1208 lm	8 W	70
	111-1655	LED-8/8W/4000K	1140.9 lm	8 W	80
	111-1655-70	LED-8/8W/4000K	1275.2 lm	8 W	70
	111-1741	LED-8/12W/2200K	1342.3 lm	12 W	70
	111-1742	LED-8/12W/2700K	1342.3 lm	12 W	80
	111-1743	LED-8/12W/3000K	1442.9 lm	12 W	80
	111-1744	LED-8/12W/4000K	1543.6 lm	12 W	80
	111-1829	LED-8/16W/2200K	1725.8 lm	16 W	70
	111-1830	LED-8/16W/2700K	1725.8 lm	16 W	80
	111-1831	LED-8/16W/3000K	1853.7 lm	16 W	80
	111-1832	LED-8/16W/4000K	1981.5 lm	16 W	80
	111-1917	LED-8/24W/2200K	2397 lm	24 W	70
	111-1918	LED-8/24W/2700K	2397 lm	24 W	80
	111-1919	LED-8/24W/3000K	2588.7 lm	24 W	80
	111-1920	LED-8/24W/4000K	2748.5 lm	24 W	80
	111-2032	LED-16/9W/PCA	1006.7 lm	9 W	60
	111-1697	LED-16/16W/2200K	1946.3 lm	16 W	70
	111-1698	LED-16/16W/2700K	1946.3 lm	16 W	80
	111-1698-70	LED-16/16W/2700K	2080.5 lm	16 W	70
	111-1699	LED-16/16W/3000K	2080.5 lm	16 W	80
	111-1699-70	LED-16/16W/3000K	2416.1 lm	16 W	70
	111-1700	LED-16/16W/4000K	2281.9 lm	16 W	80
	111-1700-70	LED-16/16W/4000K	2550.3 lm	16 W	70
	111-1785	LED-16/24W/2200K	2684.5 lm	24 W	70
	111-1786	LED-16/24W/2700K	2684.5 lm	24 W	80
	111-1787	LED-16/24W/3000K	2885.9 lm	24 W	80
	111-1788	LED-16/24W/4000K	3087.2 lm	24 W	80
	111-1873	LED-16/32W/2200K	3451.6 lm	32 W	70
	111-1874	LED-16/32W/2700K	3451.6 lm	32 W	80

Light distribution	Part ID	Light source	Rated lumens	Rated input power	CRI
	111-1875	LED-16/32W/3000K	3707.3 lm	32 W	80
	111-1876	LED-16/32W/4000K	3963 lm	32 W	80
	111-1969	LED-16/48W/2200K	4793.9 lm	48 W	70
	111-1970	LED-16/48W/2700K	4793.9 lm	48 W	80
	111-1971	LED-16/48W/3000K	5177.5 lm	48 W	80
	111-1972	LED-16/48W/4000K	5497 lm	48 W	80
[P65] pedestrian/bicycle lane	111-2029	LED-8/4W/PCA	533.5 lm	4 W	70
	111-1685	LED-8/8W/2200K	1031.4 lm	8 W	70
	111-1686	LED-8/8W/2700K	1031.4 lm	8 W	80
	111-1686-70	LED-8/8W/2700K	1102.5 lm	8 W	70
	111-1687	LED-8/8W/3000K	1102.5 lm	8 W	80
	111-1687-70	LED-8/8W/3000K	1280.3 lm	8 W	70
	111-1688	LED-8/8W/4000K	1209.2 lm	8 W	80
	111-1688-70	LED-8/8W/4000K	1351.5 lm	8 W	70
	111-1773	LED-8/12W/2200K	1422.6 lm	12 W	70
	111-1774	LED-8/12W/2700K	1422.6 lm	12 W	80
	111-1775	LED-8/12W/3000K	1529.3 lm	12 W	80
	111-1776	LED-8/12W/4000K	1636 lm	12 W	80
	111-1861	LED-8/16W/2200K	1829.1 lm	16 W	70
	111-1862	LED-8/16W/2700K	1829.1 lm	16 W	80
	111-1863	LED-8/16W/3000K	1964.6 lm	16 W	80
	111-1864	LED-8/16W/4000K	2100.1 lm	16 W	80
	111-1949	LED-8/24W/2200K	2540.4 lm	24 W	70
	111-1950	LED-8/24W/2700K	2540.4 lm	24 W	80
	111-1951	LED-8/24W/3000K	2743.6 lm	24 W	80
	111-1952	LED-8/24W/4000K	2913 lm	24 W	80
	111-2040	LED-16/9W/PCA	1066.9 lm	9 W	60
	111-1729	LED-16/16W/2200K	2062.8 lm	16 W	70
	111-1730	LED-16/16W/2700K	2062.8 lm	16 W	80
	111-1730-70	LED-16/16W/2700K	2205 lm	16 W	70
	111-1731	LED-16/16W/3000K	2205 lm	16 W	80
	111-1731-70	LED-16/16W/3000K	2560.7 lm	16 W	70
	111-1732	LED-16/16W/4000K	2418.4 lm	16 W	80
	111-1732-70	LED-16/16W/4000K	2702.9 lm	16 W	70
	111-1817	LED-16/24W/2200K	2845.2 lm	24 W	70
	111-1818	LED-16/24W/2700K	2845.2 lm	24 W	80

Light distribution	Part ID	Light source	Rated lumens	Rated input power	CRI
	111-1819	LED-16/24W/3000K	3058.6 lm	24 W	80
	111-1820	LED-16/24W/4000K	3272 lm	24 W	80
	111-1905	LED-16/32W/2200K	3658.2 lm	32 W	70
	111-1906	LED-16/32W/2700K	3658.2 lm	32 W	80
	111-1907	LED-16/32W/3000K	3929.2 lm	32 W	80
	111-1908	LED-16/32W/4000K	4200.1 lm	32 W	80
	111-2001	LED-16/48W/2200K	5080.8 lm	48 W	70
	111-2002	LED-16/48W/2700K	5080.8 lm	48 W	80
	111-2003	LED-16/48W/3000K	5487.3 lm	48 W	80
	111-2004	LED-16/48W/4000K	5826 lm	48 W	80
[R60] rectangular, side throw	111-2024	LED-8/4W/PCA	516.6 lm	4 W	70
	111-1664	LED-8/8W/2200K	998.9 lm	8 W	70
	111-1665	LED-8/8W/2700K	998.9 lm	8 W	80
	111-1665-70	LED-8/8W/2700K	1067.7 lm	8 W	70
	111-1666	LED-8/8W/3000K	1067.7 lm	8 W	80
	111-1666-70	LED-8/8W/3000K	1240 lm	8 W	70
	111-1667	LED-8/8W/4000K	1171.1 lm	8 W	80
	111-1667-70	LED-8/8W/4000K	1308.8 lm	8 W	70
	111-1753	LED-8/12W/2200K	1377.7 lm	12 W	70
	111-1754	LED-8/12W/2700K	1377.7 lm	12 W	80
	111-1755	LED-8/12W/3000K	1481.1 lm	12 W	80
	111-1756	LED-8/12W/4000K	1584.4 lm	12 W	80
	111-1841	LED-8/16W/2200K	1771.4 lm	16 W	70
	111-1842	LED-8/16W/2700K	1771.4 lm	16 W	80
	111-1843	LED-8/16W/3000K	1902.6 lm	16 W	80
	111-1844	LED-8/16W/4000K	2033.9 lm	16 W	80
	111-1929	LED-8/24W/2200K	2460.3 lm	24 W	70
	111-1930	LED-8/24W/2700K	2460.3 lm	24 W	80
	111-1931	LED-8/24W/3000K	2657.1 lm	24 W	80
	111-1932	LED-8/24W/4000K	2821.2 lm	24 W	80
	111-2035	LED-16/9W/PCA	1033.3 lm	9 W	60
	111-1709	LED-16/16W/2200K	1997.7 lm	16 W	70
	111-1710	LED-16/16W/2700K	1997.7 lm	16 W	80
	111-1710-70	LED-16/16W/2700K	2135.5 lm	16 W	70
	111-1711	LED-16/16W/3000K	2135.5 lm	16 W	80
	111-1711-70	LED-16/16W/3000K	2479.9 lm	16 W	70

Light distribution	Part ID	Light source	Rated lumens	Rated input power	CRI
	111-1712	LED-16/16W/4000K	2342.1 lm	16 W	80
	111-1712-70	LED-16/16W/4000K	2617.7 lm	16 W	70
	111-1797	LED-16/24W/2200K	2755.5 lm	24 W	70
	111-1798	LED-16/24W/2700K	2755.5 lm	24 W	80
	111-1799	LED-16/24W/3000K	2962.1 lm	24 W	80
	111-1800	LED-16/24W/4000K	3168.8 lm	24 W	80
	111-1885	LED-16/32W/2200K	3542.9 lm	32 W	70
	111-1886	LED-16/32W/2700K	3542.9 lm	32 W	80
	111-1887	LED-16/32W/3000K	3805.3 lm	32 W	80
	111-1888	LED-16/32W/4000K	4067.7 lm	32 W	80
	111-1981	LED-16/48W/2200K	4920.6 lm	48 W	70
	111-1982	LED-16/48W/2700K	4920.6 lm	48 W	80
	111-1983	LED-16/48W/3000K	5314.3 lm	48 W	80
	111-1984	LED-16/48W/4000K	5642.3 lm	48 W	80
[S65] asymmetric, side throw	111-2022	LED-8/4W/PCA	552.8 lm	4 W	70
	111-1656	LED-8/8W/2200K	1068.7 lm	8 W	70
	111-1657	LED-8/8W/2700K	1068.7 lm	8 W	80
	111-1657-70	LED-8/8W/2700K	1142.4 lm	8 W	70
	111-1658	LED-8/8W/3000K	1142.4 lm	8 W	80
	111-1658-70	LED-8/8W/3000K	1326.6 lm	8 W	70
	111-1659	LED-8/8W/4000K	1252.9 lm	8 W	80
	111-1659-70	LED-8/8W/4000K	1400.3 lm	8 W	70
	111-1745	LED-8/12W/2200K	1474 lm	12 W	70
	111-1746	LED-8/12W/2700K	1474 lm	12 W	80
	111-1747	LED-8/12W/3000K	1584.6 lm	12 W	80
	111-1748	LED-8/12W/4000K	1695.1 lm	12 W	80
	111-1833	LED-8/16W/2200K	1895.2 lm	16 W	70
	111-1834	LED-8/16W/2700K	1895.2 lm	16 W	80
	111-1835	LED-8/16W/3000K	2035.6 lm	16 W	80
	111-1836	LED-8/16W/4000K	2176 lm	16 W	80
	111-1921	LED-8/24W/2200K	2632.3 lm	24 W	70
	111-1922	LED-8/24W/2700K	2632.3 lm	24 W	80
	111-1923	LED-8/24W/3000K	2842.8 lm	24 W	80
	111-1924	LED-8/24W/4000K	3018.3 lm	24 W	80
	111-2033	LED-16/9W/PCA	1105.5 lm	9 W	60
	111-1701	LED-16/16W/2200K	2137.3 lm	16 W	70

Light distribution	Part ID	Light source	Rated lumens	Rated input power	CRI
	111-1702	LED-16/16W/2700K	2137.3 lm	16 W	80
	111-1702-70	LED-16/16W/2700K	2284.7 lm	16 W	70
	111-1703	LED-16/16W/3000K	2284.7 lm	16 W	80
	111-1703-70	LED-16/16W/3000K	2653.2 lm	16 W	70
	111-1704	LED-16/16W/4000K	2505.8 lm	16 W	80
	111-1704-70	LED-16/16W/4000K	2800.6 lm	16 W	70
	111-1789	LED-16/24W/2200K	2948 lm	24 W	70
	111-1790	LED-16/24W/2700K	2948 lm	24 W	80
	111-1791	LED-16/24W/3000K	3169.1 lm	24 W	80
	111-1792	LED-16/24W/4000K	3390.2 lm	24 W	80
	111-1877	LED-16/32W/2200K	3790.5 lm	32 W	70
	111-1878	LED-16/32W/2700K	3790.5 lm	32 W	80
	111-1879	LED-16/32W/3000K	4071.2 lm	32 W	80
	111-1880	LED-16/32W/4000K	4352 lm	32 W	80
	111-1973	LED-16/48W/2200K	5264.5 lm	48 W	70
	111-1974	LED-16/48W/2700K	5264.5 lm	48 W	80
	111-1975	LED-16/48W/3000K	5685.7 lm	48 W	80
	111-1976	LED-16/48W/4000K	6036.7 lm	48 W	80
[S70] asymmetric, side throw	111-2023	LED-8/4W/PCA	545 lm	4 W	70
	111-1660	LED-8/8W/2200K	1053.7 lm	8 W	70
	111-1661	LED-8/8W/2700K	1053.7 lm	8 W	80
	111-1661-70	LED-8/8W/2700K	1126.4 lm	8 W	70
	111-1662	LED-8/8W/3000K	1126.4 lm	8 W	80
	111-1662-70	LED-8/8W/3000K	1308.1 lm	8 W	70
	111-1663	LED-8/8W/4000K	1235.4 lm	8 W	80
	111-1663-70	LED-8/8W/4000K	1380.8 lm	8 W	70
	111-1749	LED-8/12W/2200K	1453.4 lm	12 W	70
	111-1750	LED-8/12W/2700K	1453.4 lm	12 W	80
	111-1751	LED-8/12W/3000K	1562.4 lm	12 W	80
	111-1752	LED-8/12W/4000K	1671.5 lm	12 W	80
	111-1837	LED-8/16W/2200K	1868.7 lm	16 W	70
	111-1838	LED-8/16W/2700K	1868.7 lm	16 W	80
	111-1839	LED-8/16W/3000K	2007.1 lm	16 W	80
	111-1840	LED-8/16W/4000K	2145.6 lm	16 W	80
	111-1925	LED-8/24W/2200K	2595.4 lm	24 W	70
	111-1926	LED-8/24W/2700K	2595.4 lm	24 W	80

Light distribution	Part ID	Light source	Rated lumens	Rated input power	CRI
	111-1927	LED-8/24W/3000K	2803.1 lm	24 W	80
	111-1928	LED-8/24W/4000K	2976.1 lm	24 W	80
	111-2034	LED-16/9W/PCA	1090.1 lm	9 W	60
	111-1705	LED-16/16W/2200K	2107.5 lm	16 W	70
	111-1706	LED-16/16W/2700K	2107.5 lm	16 W	80
	111-1706-70	LED-16/16W/2700K	2252.8 lm	16 W	70
	111-1707	LED-16/16W/3000K	2252.8 lm	16 W	80
	111-1707-70	LED-16/16W/3000K	2616.2 lm	16 W	70
	111-1708	LED-16/16W/4000K	2470.8 lm	16 W	80
	111-1708-70	LED-16/16W/4000K	2761.5 lm	16 W	70
	111-1793	LED-16/24W/2200K	2906.9 lm	24 W	70
	111-1794	LED-16/24W/2700K	2906.9 lm	24 W	80
	111-1795	LED-16/24W/3000K	3124.9 lm	24 W	80
	111-1796	LED-16/24W/4000K	3342.9 lm	24 W	80
	111-1881	LED-16/32W/2200K	3737.4 lm	32 W	70
	111-1882	LED-16/32W/2700K	3737.4 lm	32 W	80
	111-1883	LED-16/32W/3000K	4014.3 lm	32 W	80
	111-1884	LED-16/32W/4000K	4291.1 lm	32 W	80
	111-1977	LED-16/48W/2200K	5190.9 lm	48 W	70
	111-1978	LED-16/48W/2700K	5190.9 lm	48 W	80
	111-1979	LED-16/48W/3000K	5606.2 lm	48 W	80
	111-1980	LED-16/48W/4000K	5952.2 lm	48 W	80

WE-EF LEUCHTEN GmbH
Töpinger Straße 16, 29646 Bispingen, Germany - Phone: +49 5194 909-0
info@we-ef.com - https://we-ef.com